TECHNICAL DATA SHEET

MedPlus® Medical Air Plant—With Desiccant Dryers

(Sectional Base Mount Configurations)

From Hill-Rom

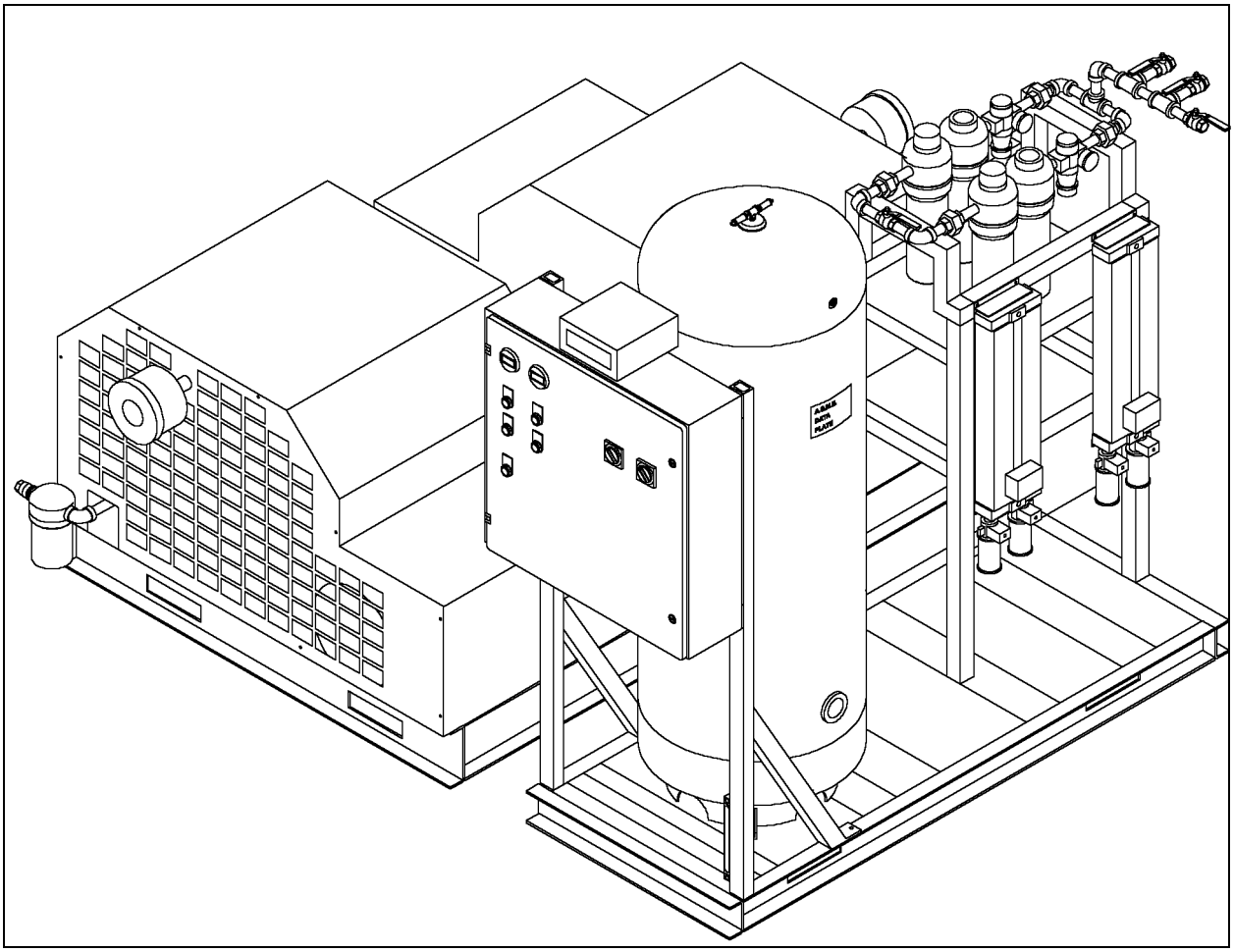

Product No. P6916 Series

For Parts or Technical Assistance

Technical Support: (800) 445-3720
Customer Service: (800) 445-3730
Canada: (800) 267-2337
International: Contact your distributor.
www.hill-rom.com

tds028rb

MedPlus® Medical Air Plant—With Desiccant Dryers

(Sectional Base Mount Configurations) Technical Data Sheet

Revisions

Revision Letter	Pages Affected	Date
Original Issue		September, 1999
A	All	January, 2001
B	All	April, 2003

tds028rb

© 2003 Hill-Rom Services, Inc. ALL RIGHTS RESERVED.

No part of this text shall be reproduced or transmitted in any form or by any means, electronic or mechanical, including photocopying, recording, or by any information or retrieval system without written permission from Hill-Rom Services, Inc. (Hill-Rom).

Third Edition

First Printing 1999

Printed in the USA

Hill-Rom® is a registered trademark of Hill-Rom Services, Inc.

MedPlus® is a registered trademark of Hill-Rom Medaes, Inc.

National Electrical Code® is a registered trademark of National Fire Protection Association, Inc.

NEC® is a registered trademark of National Fire Protection Association, Inc.

Underwriters Laboratories Inc.® is a registered trademark of Underwriters Laboratories Inc.

The information contained in this document is subject to change without notice. Hill-Rom makes no commitment to update or keep current, the information contained in this document.

The only product warranty intended by Hill-Rom is the express, written warranty accompanying the bill of sale to the original purchaser. Hill-Rom makes no other warranty, express or implied, and in particular, makes no warranty of merchantability or fitness for a particular purpose.

Additional copies of this technical data sheet can be obtained from Hill-Rom.

Table of Contents

Introduction 1
Standards 1
Plant Description 1
Plant Performance 1
Specifying Your Plant 2
Detailed Specifications 2
Electrical Control System 5
Detailed Electrical Control System Specifications 5
MedPlus® Medical Air Plant Accessories 5
Warranty 5
Ordering Information 6
Space Requirements 7
Installation 8

NOTES:

MedPlus® Medical Air Plant—With Desiccant Dryers (Sectional Base Mount Configurations)

TECHNICAL DATA SHEET

Introduction

The MedPlus® Medical Air Plant reliably produces stable medical air service for all types of medical facilities.

Medical air is distributed to critical care areas such as operating rooms, intensive care units, patient rooms, delivery rooms, emergency rooms, nurseries, and post-operative units.

Medical air is delivered to and breathed by a patient. Medical air, therefore, must be of the highest quality, free of particulates and liquid water.

Standards

The MedPlus® Medical Air Plant fulfills all applicable codes and standards:

- National Fire Protection Association (NFPA) 99
- American Society of Mechanical Engineers (ASME)
- National Electrical Manufacturers Association (NEMA)
- Underwriters Laboratories Inc.®[1] (UL), Category NITW File E-113767
- National Electrical Code®[2] (NEC®[3])
- Compressed Air and Gas Institute (CAGI)

Plant Description

The MedPlus® Medical Air Plant consists of the following specifications:

- Assembled in the USA to allow quick upgrade or service response
- Local audible and visual alarms for the lag compressor, including dry contacts for the medical warning systems for the lag and individual Thermal Malfunction Protection Devices
- Meets all applicable NEC® requirements
- Factory-assembled, pre-piped, pre-wired, and tested (some pipe and wire must be re-assembled in the field)
- Receiver tank constructed according to ASME standards and affixed with a National Board label indicating the number of gallons
- Inlet particulate filter with replaceable element for each compressor

Plant Performance

- The plant requires no water for air generation.
- The lag compressor operates from the same control cabinet as the lead compressor.
- The plant operates on demand. (The air plant can operate continuously if the medical facility demands it.)
- Each motor/medical air compressor is thoroughly tested to CAGI requirements with record of compliance available upon request.

1. Underwriters Laboratories Inc.® is a registered trademark of Underwriters Laboratories Inc.
2. National Electrical Code® is a registered trademark of National Fire Protection Association, Inc.
3. NEC® is a registered trademark of National Fire Protection Association, Inc.

Specifying Your Plant

Include the following in your specifications for a MedPlus® Medical Air Plant. (Use "Ordering Information" on page 6 to fill in the blanks).

The medical air plant shall be MedPlus® Medical Air Plant—With Desiccant Dryers by Hill-Rom, product number _____, consisting of _____ belt-driven, continuous-duty-rated, single-acting, reciprocating, oil-less, air-cooled air compressors. A complete sectional assembly, consisting of a drying system, ASME receiver, filter/regulator system, and a UL-listed (Category NITW File E-113767) electrical control system housed in a NEMA Type-12 control cabinet.

The plant shall be designed to meet NFPA 99, so that failure of a major component does not jeopardize the supply of air. Individual compressors shall be serviced without shutting down the entire system.

The capacity of each compressor shall be _____ Cubic Feet/Minute (CFM) at 50 psi (345 kPa) requiring no more than _____ horsepower and no more than 1800 motor revolutions per minute (rpm) at levels between 0 and 100 psi (689 kPa). Total capacity according to NFPA 99 requirements for the medical air systems, not including the backup (lag) air compressor, shall be _____ CFM at 50 psi (345 kPa) with a total system horsepower, including the backup air compressor, of _____ horsepower.

Power supply shall be _____V, three phase, 60 Hz (specify 208, 230 or 460V).

The dryers are located downstream of the air compressors and upstream of the air receiver.

Detailed Specifications

The MedPlus® Medical Air Plant is a complete sectional, centralized unit that delivers medical air service to the medical facility. The MedPlus® Medical Air Plant is a base-mounted system (see figure 1 on page 4). The plant consists of the following parts mounted onto multiple sub-bases:

- Two, three, or four belt-driven, oil-less, medical air compressors
- Inlet filter with isolation (shutoff) valve for each compressor
- Vertical receiver
- Dryer system
- Filter/regulator system
- Control cabinet
- Required valves and interconnecting piping
- Dew Point/CO monitor
- Isolation pads
- Inlet flexible connector for each compressor (shipped loose for field installation)

The entire plant requires multiple air intake and discharge connections. Multiple electrical connections are required.

Each medical air compressor is a reciprocating, oil-less. The medical air compressor is a single-acting, single-stage unit with an after-cooler and a moisture separator.

5 hp Compressors

Each compressor consists of a cast iron crankcase, a machined, high grade, ductile, cast iron crankshaft that is supported by bearings on either side of it. The permanently sealed bearings are mounted within the crankcase. A single piece, integral aluminum piston rod is attached to the crankshaft and can be easily removed. The piston has two compression rings, and two guide rings. The top of the piston head has small holes that allow pressure to exert force on the inside of the compression rings resulting in improved sealing against the chrome-plated cylinder wall.

7.5 to 15 hp Compressors

Each compressor consists of a cast iron crankcase, a machined, high grade, ductile, cast iron crankshaft that is supported by two sets of bearings on one side to create an overhung crankshaft for easy maintenance. The aluminum piston rod is comprised of two pieces: one piece is attached to the crankshaft with permanently sealed bearings, and the other piece consists of the piston rod itself. The aluminum piston has three compression rings and two guide rings. The top of the piston head is coated with a thermal heat barrier that insulates the piston, wrist pin, rod, and bearing attachment from the heat generated in the compression area.

The piston rings ride along the cast iron cylinder that is deeply finned to remove the heat of compression. The internal cylinder is hardened nickel-plated and highly polished.

A steel valve plate has stainless steel intake and discharge valves that are mounted onto it. In turn, the valve plate is mounted on the top of the cylinder. The discharge head encloses the area and contains the intake and discharge connection.

A Thermal Malfunction Protection Device (TMPD) is located at the discharge of each compressor cylinder to shut down the unit if there is excessive temperature. The TMPD is set for 400°F (204°C) on the 5 hp compressor and 450°F (232°C) on the 7.5 hp to 15 hp.

Each medical air compressor is capable of operating continuously from one to 100 psi (689 kPa).

The continuous-duty, reciprocating, medical air compressors produce medical air without water for simpler operation, eliminating water and sewage costs. Time-dependent alternation between compressors ensures even usage.

A cast iron flywheel with an industrial-grade fan is belt-driven by the motor and provides air movement to cool the cylinders.

See table 1 on page 3, for the maximum revolutions per minute (rpm) and cylinders for each horsepower.

Table 1. RPM and Cylinders

HP	RPM	Cylinders
5	650	2
7.5	1065	2
10	1450	2
15	1140	3

The medical air compressor uses no oil within the compression cylinder or the crankcase of the unit.

Each compressor module is driven by an electrical motor that is 208/230/460V (on motors 10 hp or smaller), 230/460V (on 15 hp motors), three-phase, 1.15 service factor, with class B insulation.

Each 7.5 through 15 hp compressor module is mounted on an integral base within a base to reduce vibration and is enclosed within a shroud to direct airflow around the compressor.

The inter-connecting piping includes the following:

- **Intake:** For each compressor; a 4 micron intake filter, a stainless steel flexible connector, and an isolation (shutoff) valve
- **Discharge:** The manifold (if multiple cylinders), an isolation (shutoff) valve, a Thermal Malfunction Protection Device for each cylinder, an air-cooled after cooler, an automatic drain with a timed solenoid valve, a stainless steel flexible connector, a dryer system with a by-pass of each dryer, a by-pass of the receiver, a dual bank filter/regulator system, and an isolation (shutoff) valve from the plant to the hospital

All inter-connecting piping is copper tubing or brass piping, cleaned for oxygen service according to NFPA 99 requirements.

Each compressor has an after-cooler rated for a maximum 15° approach and, an electrically operated drain that discharges any water in the trap based on time.

The receiver is ASME-rated with a National Board label affixed. The receiver contains an electrically operated drain and a manual drain. Each receiver has a pressure gauge and a sight-glass. The receiver is coated with an FDA/USDA-approved vinyl material to prevent corrosion.

The timed-purge controlled desiccant dryers are located before the receiver. Each dryer maintains a 20°F (-6°C) dew point. It operates only as required to maintain the set point for the medical air plant dew point. The cycling between the twin-towers is controlled by the system to maintain the desiccant dryers and to also reduce the purge loss. Each dryer is sized to meet the Peak Calculated Demand (PCD). The air entering the dryer is 100 PSIG (689 kPa) or higher, 100°F (38°C) or less, and the ambient temperature is 100°F (38°C).

The timed-purge controlled desiccant drying system has a separate electrical connection for each dryer and includes two twin-tower desiccant dryers valved to allow one unit to operate while the other is a stand-by unit. The stand-by unit is brought on-line quickly by closing and opening a series of valves. Pneumatic and electrical controls are integral to the package.

The filter/regulator system is a redundant system that is appropriately valved to isolate one bank from the other, as well as allow one side to be switched to operate while closing off the other side. The system is comprised of two three-way valves, and inter-connecting piping of either copper tubing or brass piping, which is cleaned for oxygen service.

Each bank is comprised of the following:

- Particulate/coalescing filter to remove particulates to 1 micron and all liquids (0.1 ppm maximum carryover on all liquids)
- Absorption filter to remove odors, vapor, and particulates to 0.01 micron (0.003 ppm maximum carryover)
- Regulator that maintains a field adjustable 55 psi (379 kPa) pressure and meets the PCD flow rate

Each filter is housed in an aluminum bowl that is easy to remove for replacement of the field adjustable element. The aluminum bowl screws into a housing that includes a gauge to determine the need for field adjustable replacement.

The filter/regulator system has a port for connecting the dew point/CO monitor and a sample/test port.

Figure 1. MedPlus® Medical Air Plant (Typical Sectional Duplex Base Mount)

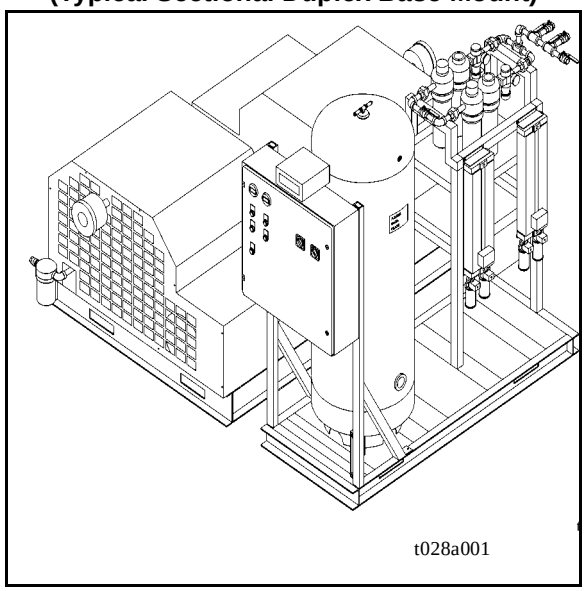

Electrical Control System

The electrical control cabinet is UL-listed and contains the electrical controls for operating the medical air plant. All electrical components are UL-listed. The following are the key components:

- Disconnect/circuit breaker switches for each motor
- NEMA-rated motor starters for each motor
- Control circuit transformers
- Medical air switch for each compressor module
- Microprocessor alternator to control the operation of all configurations of the plant
- Thermal Malfunction Protection Device (TMPD) shutdown and alarm light
- Visual and audible alarm for lag unit operation
- Hour meter for each compressor
- Hand/Off/Automatic switches for each compressor
- NEMA Type-12 enclosure

Detailed Electrical Control System Specifications

The electrical control system consists of a molded case circuit breaker, magnetic starter with overload, and a Hand/Off/Automatic selector switch for each compressor motor. In hand (manual) position, the motor runs regardless of the pressure level. In the automatic position, individual motors run depending on the pressure level sensed by the pressure switch. Included in the electrical control system is a run-time meter and a running light. The rest of the electrical control system depends on whether a duplex, triplex, or quadraplex configuration is selected.

The duplex has a lead/lag configuration. The lead compressor comes on at 85 psi (586 kPa) and turns off at 100 psi (689 kPa). The lag compressor comes on at 80 psi (552 kPa) and turns off at 95 psi (655 kPa). The audible and visual lag alarm signals an alarm condition when the pressure level reaches 80 psi (552 kPa).

The triplex has a lead compressor #1/lag compressor #2/lag compressor #3 configuration. Lead compressor #1 comes on at 85 psi (586 kPa) and turns off at 100 psi (689 kPa). Lag compressor #2 comes on at 80 psi (552 kPa) and turns off at 95 psi (655 kPa). Lag compressor #3 comes on at 75 psi (517 kPa) and turns off at 90 psi (621 kPa). The audible and visual lag alarm signals an alarm condition when the pressure level reaches 75 psi (517 kPa).

The quadraplex has a lead compressor #1/lag compressor #2/lag compressor #3/lag compressor #4 configuration. Lead compressor #1 comes on at 85 psi (586 kPa) and turns off at 100 psi (689 kPa). Lag compressor #2 comes on at 80 psi (552 kPa) and turns off at 95 psi (655 kPa). Lag compressor #3 comes on at 75 psi (517 kPa) and turns off at 90 psi (621 kPa). Lag compressor #4 comes on at 70 psi (483 kPa) and turns off at 85 psi (586 kPa). The audible and visual lag alarm signals an alarm condition when the pressure level reaches 70 psi (483 kPa).

Duplex configurations have dual disconnect switches to the control system. Triplex and quadraplex configurations have a single disconnect switch to the control system.

A microprocessor alternator is used on all configurations to ensure even compressor usage.

Redundant control circuit transformers power the system. A control relay activates a redundant transformer if the control circuit transformer fails.

MedPlus® Medical Air Plant Accessories

Hill-Rom® accessories are supplied with each air plant. The following accessories are shipped loose and installed by others:

- Discharge flex connector
- Intake flexible connectors for each compressor
- Vibration dampeners on 5 hp plants

Warranty

Please refer to the service manual for the warranty.

Ordering Information

The tables below detail the sectional base mount duplex, triplex, and quadraplex air plants.

Table 2. Sectional Duplex Base Mount

	Motor hp		SCFM at 50 psi		SCFM at 100 psi				
Product Number[1]	Each Comp	Total Plant[2]	Each Comp	Plant (per NFPA)[3]	Each Comp	Plant (per NFPA)[3]	Receiver Size (Gal)	dBa[4]	Weight
P6916-9031-203	5	10	18.2	18.2	15.6	15.6	80	85	1581
P6916-9031-204	7.5	15	31.6	31.6	25.9	25.9	120	77	3335
P6916-9031-205	10	20	43.0	43.0	35.2	35.2	120	77	3524
P6916-9031-206	15	30	69.0	69.0	56.5	56.5	120	85	3550

Table 3. Sectional Triplex Base Mount

	Motor hp		SCFM at 50 psi		SCFM at 100 psi				
Product Number[1]	Each Comp	Total Plant[2]	Each Comp	Plant (per NFPA)[3]	Each Comp	Plant (per NFPA)[3]	Receiver Size (Gal)	dBa[4]	Weight
P6916-9031-304	7.5	22.5	31.6	63.2	25.9	51.8	120	77	4750
P6916-9031-305	10	30	43.0	86.0	35.2	70.4	120	77	5300
P6916-9031-306	15	45	69.0	138.0	56.5	113.0	120	84	5450

Table 4. Sectional Quadraplex Base Mount

	Motor hp		SCFM at 50 psi		SCFM at 100 psi				
Product Number[1]	Each Comp	Total Plant[2]	Each Comp	Plant (per NFPA)[3]	Each Comp	Plant (per NFPA)[3]	Receiver Size (Gal)	dBa[4]	Weight
P6916-9031-404	7.5	30	31.6	94.8	25.9	77.7	120	77	6150
P6916-9031-405	10	40	43.0	129.0	35.2	105.6	120	77	6400
P6916-9031-406	15	60	69.0	207.0	56.5	169.5	120	84	6700

[1] To specify a voltage, add a suffix to the product number: A for 208V, B for 230V, and C for 460V.

[2] Total plant hp, including the lag compressor.

[3] Plant capacity per NFPA, not including the lag compressor.

[4] Sound level of one compressor at a distance of one meter.

Space Requirements

When choosing the appropriate MedPlus® Medical Air Plant, see the space requirements for the base-mounted units (see table 5 on page 7), (see table 6 on page 7), (see table 7 on page 7), and (see figure 2 on page 8). To compare space requirements for the tank-mounted and stack-mounted units, see the corresponding technical data sheets.

NOTE:
To aid maintenance, Hill-Rom recommends that a minimum clearance of 4' (122 cm) around the entire unit be added to the space requirements listed below.

For detailed dimensional drawings and electrical schematics specific to your facility's MedPlus® Medical Air Plant, contact your Hill-Rom Account Executive or Customer Service at (800) 445-3730.

Table 5. Sectional Duplex Base Mount

Product Number	Length	Height	Width	Connections National Pipe Thread (NPT)	
				Discharge	Inlet (2)
P6916-9031-203	74" (187 cm)	73" (185 cm)	87" (220 cm)	½"	1"
P6916-9031-204	94.5" (240.0 cm)	76.9" (195.3 cm)	90" (228 cm)	½"	1½"
P6916-9031-205	94.5" (240.0 cm)	76.9" (195.3 cm)	90" (228 cm)	1"	1½"
P6916-9031-206	94.5" (240.0 cm)	76.9" (195.3 cm)	90" (228 cm)	1"	1½"

Table 6. Sectional Triplex Base Mount

Product Number	Length	Height	Width	Connections (NPT)	
				Discharge	Inlet (3)
P6916-9031-304	144" (365 cm)	76.9" (195.3 cm)	90" (228 cm)	1"	1½"
P6916-9031-305	146.5" (372.1 cm)	89.8" (228.0 cm)	103.5" (262.8 cm)	1"	1½"
P6916-9031-306	146.5" (372.1 cm)	80" (203 cm)	112.5" (285.7 cm)	1"	1½"

Table 7. Sectional Quadraplex Base Mount

Product Number	Length	Height	Width	Connections (NPT)	
				Discharge	Inlet (4)
P6916-9031-404	156.3" (397.0 cm)	89.8" (228.0 cm)	103.5" (262.8 cm)	1"	1½"
P6916-9031-405	156.3" (397.0 cm)	80.1" (203.4 cm)	112.5" (285.7 cm)	1"	1½"
P6916-9031-406	166.8" (423.6 cm)	93.1" (236.4 cm)	127.5" (323.8 cm)	1½"	1½"

Figure 2. Typical Sectional Duplex Base Mount Dimensions

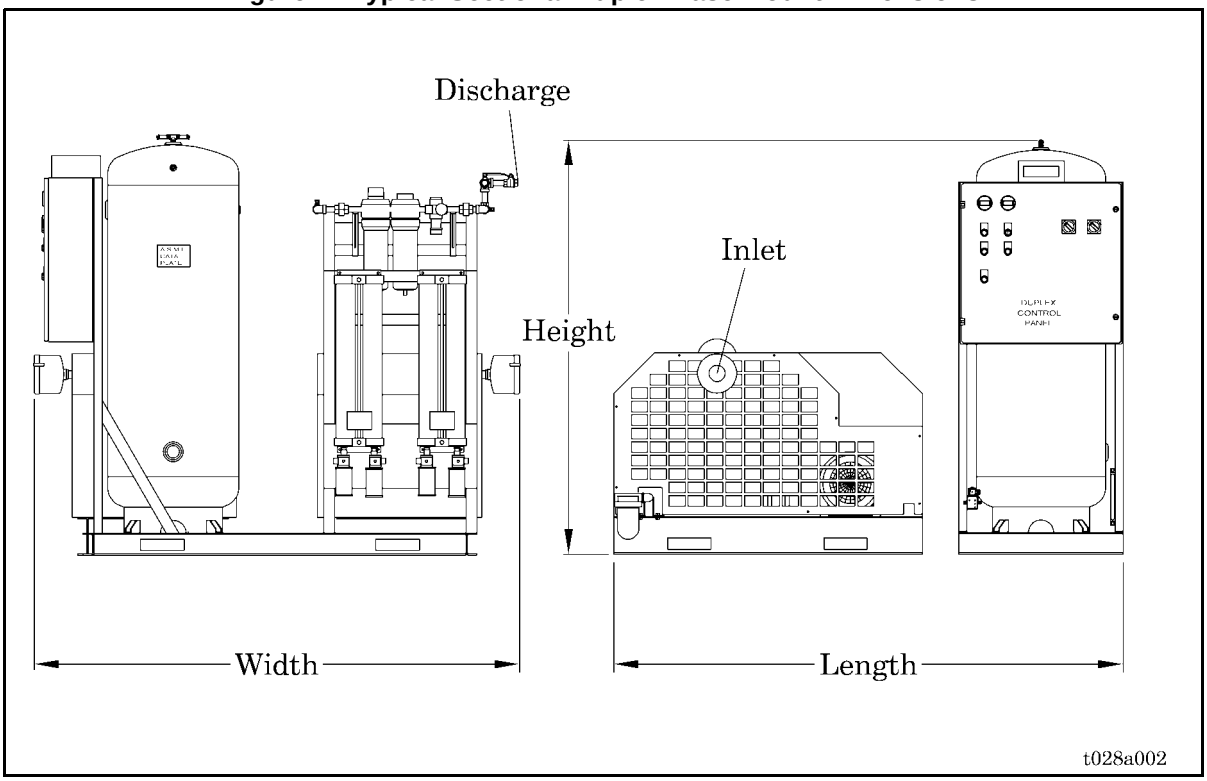

Installation

CAUTION:
The unit must be installed properly and started by a Hill-Rom representative. Failure to do so may void the warranty.

Hill-Rom recommends that the MedPlus® Medical Air Plant be installed to meet relevant building codes, *adopted* sections of NFPA 99, the *MedPlus® Medical Air Plant—Refrigerated and Desiccant Dryers Service Manual* (man265), and the following steps (see figure 3 on page 10).

For electrical and dimensional system schematics specific to your facility's medical air plant, contact your Hill-Rom Account Executive or Customer Service at (800) 445-3730.

1. Install the MedPlus® Medical Air Plant in a well-ventilated room. The temperature of the area should be 70°F (21°C) with a minimum ambient temperature of 40°F (4°C) and a maximum ambient temperature of 100°F (38°C). Provide for adequate cross air circulation to remove heat generated by the compressors. Verify ventilation needed for the maximum British Thermal Unit (BTU) output with your heating, ventilation, and air conditioning (HV AC) personnel.

NOTE:
If the maximum ambient temperature exceeds 100°F (38°C), call your Hill-Rom Account Executive or Customer Service at (800) 445-3730 for recommendations.

CAUTION:
The unit must be installed properly and started by a Hill-Rom representative. Failure to do so may void the warranty.

2. Hill-Rom recommends a minimum clearance of 4' (122 cm) around the entire unit to aid maintenance. If this amount of space is not available, call your Hill-Rom Account Executive or Customer Service at (800) 445-3730.

3. Check the actual voltage at the intended medical air plant site. Your facility's distribution system may influence the line voltage. If the voltage is below 208V, call your Hill-Rom Account Executive or Customer Service at (800) 445-3730.

4. Bolt the system securely to a 4" (10 cm) high concrete base supplied by the installing contractor. Level the plant to 1/16" (1.59 mm) and shim the frame to prevent any bowing. If the unit is not mounted on the ground floor, the engineer may wish to consider an inertia pad even though vibration transmission is minimal with the MedPlus® Medical Air Plant.

5. The electrical contractor furnishes and installs the proper wiring size and type to the pre-wired control cabinet according to NEC®[1]. Some larger plants may be broken down to smaller components for shipment, and require some additional control wiring and plumbing connections.

6. Size the intake line to minimize back pressure after the inlet to less than 4"H_2O (7 mm Hg) of water. For a duplex arrangement, the size of the common intake line should be at least one pipe size larger than the individual air compressor intake line. For triplex and quadraplex arrangements, the intake line size should be upsized for **each** air compressor intake. The size of the common intake line is a function of the length of the run, elbows, connections, valves, and the capacity of the compressor. For complete information on proper sizing of the intake line, refer to the *Piped Medical Gas Systems Design Guide* (ds035).

7. Use the flexible connector supplied with the air plant to connect the piping from the air plant distribution line to the air plant. Hang all piping according to NFPA 99 building codes.

NOTE:
The medical air plant price includes a factory- trained representative who reviews the installation and starts the medical air plant.

8. To schedule an appointment, the contractor should notify the Hill-Rom Service Center two weeks prior to the startup date.

9. The pressure switches are preset at the factory. Due to the vibration during shipping, the switches may have to be adjusted.

10. Hill-Rom furnishes the following system accessories with each MedPlus® Medical Air Plant: intake flexible connector (one per compressor) and vibration dampeners (5 hp). All accessories are shipped loose for field installation by others. For details, see NFPA 99 and specific plant installation schematics.

11. The electrical and mechanical contractors re-install all interconnecting piping and wiring.

12. Installation accessories are provided by Hill-Rom as specified.

13. Hill-Rom shall make available to the owner of the medical facility an optional system preventive maintenance contract.

1. NEC® is a registered trademark of National Fire Protection Association, Inc.
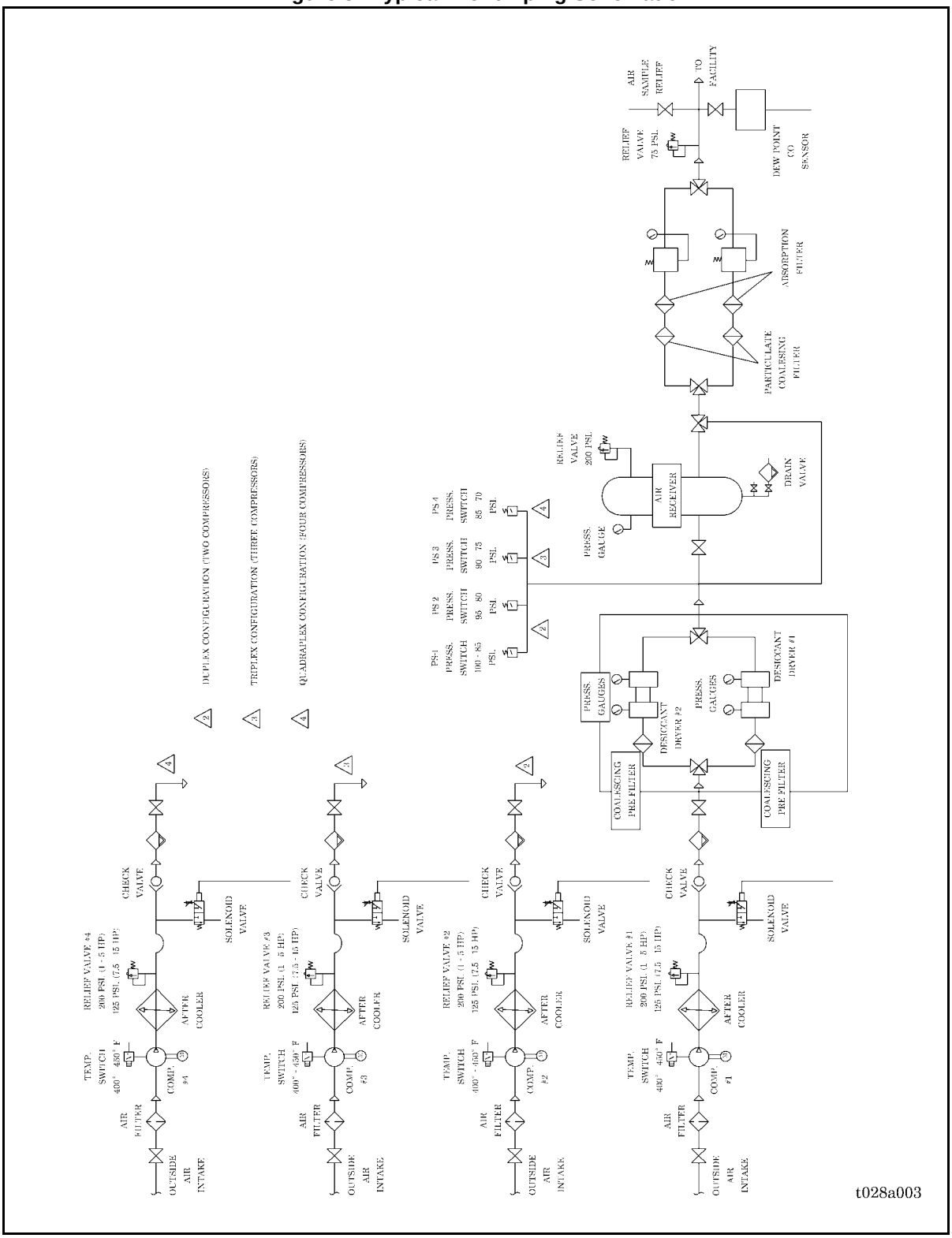
Figure 3. Typical Flow/Piping Schematic