DWG NO	SH	REV
6914-3100-009	1	3

REVISION HISTORY

REV	DESCRIPTION	ECO/DATE	APPROVED
3	CHG DESCRIPTION FOR NEW STARTER	966469/6-2-96	

NOTES:

1. OVERLOAD HEATERS FOR C-H STARTER SERIES AN16
2. FUSES FU-1 BUSSMANN TYPE FNQR
   FUSES FU-2 BUSSMANN TYPE FNM
3. CONTROL WIRING #18 AWG TYPE MTW
4. VS-1: OPENS AT 23" Hg. CLOSE AT 18" Hg.
5. _ _ _ _ CONNECTIONS EXTERNAL TO CONTROL PANEL.
6. X - WIRE #
   (X) - COMPONENT TERMINAL #
   □ - TB #
7. LEAD A1 TO CCT CONNECTED.
   208 - H3
   230 - H2
   460 - H1

PANEL STOCK #	MTR HP	VOLTS	FLA (NEC)	M-1 SIZE	M-1 HEATER	CB1 AMPS	CCT-1 VA	FU-1 SIZE	FU-2 SIZE
6914-9220-021	1	208	4	0	H2008B-3	15A	75	3/4	8/10
6914-9220-022	1	230	3.6	0	H2008B-3	15A			
6914-9220-023	1	460	1.8	0	H2005B-3	15A			
6914-9220-024	2	208	7.5	0	H2009B-3	15A			
6914-9220-025	2	230	6.8	0	H2009B-3	15A			
6914-9220-026	2	460	3.4	0	H2007B-3	15A			
6914-9220-027	3	208	10.6	0	H2010B-3	20A			
6914-9220-028	3	230	9.6	0	H2010B-3	20A			
6914-9220-029	3	460	4.8	0	H2008B-3	15A			
6914-9220-030	5	208	16.7	1	H2012B-3	30A	150	1.5	1.5
6914-9220-031	5	230	15.2	1	H2012B-3	30A			
6914-9220-032	5	460	7.6	0	H2009B-3	15A			
6914-9220-033	7.5	208	24.2	1	H2013B-3	50A			
6914-9220-034	7.5	230	22.0	1	H2013B-3	50A			
6914-9220-035	7.5	460	11.0	1	H2011B-3	25A			
6914-9220-036	10	208	30.8	2	H2014B-3	60A			
6914-9220-037	10	230	28.0	2	H2014B-3	60A			
6914-9220-038	10	460	14.0	1	H2011B-3	40A			

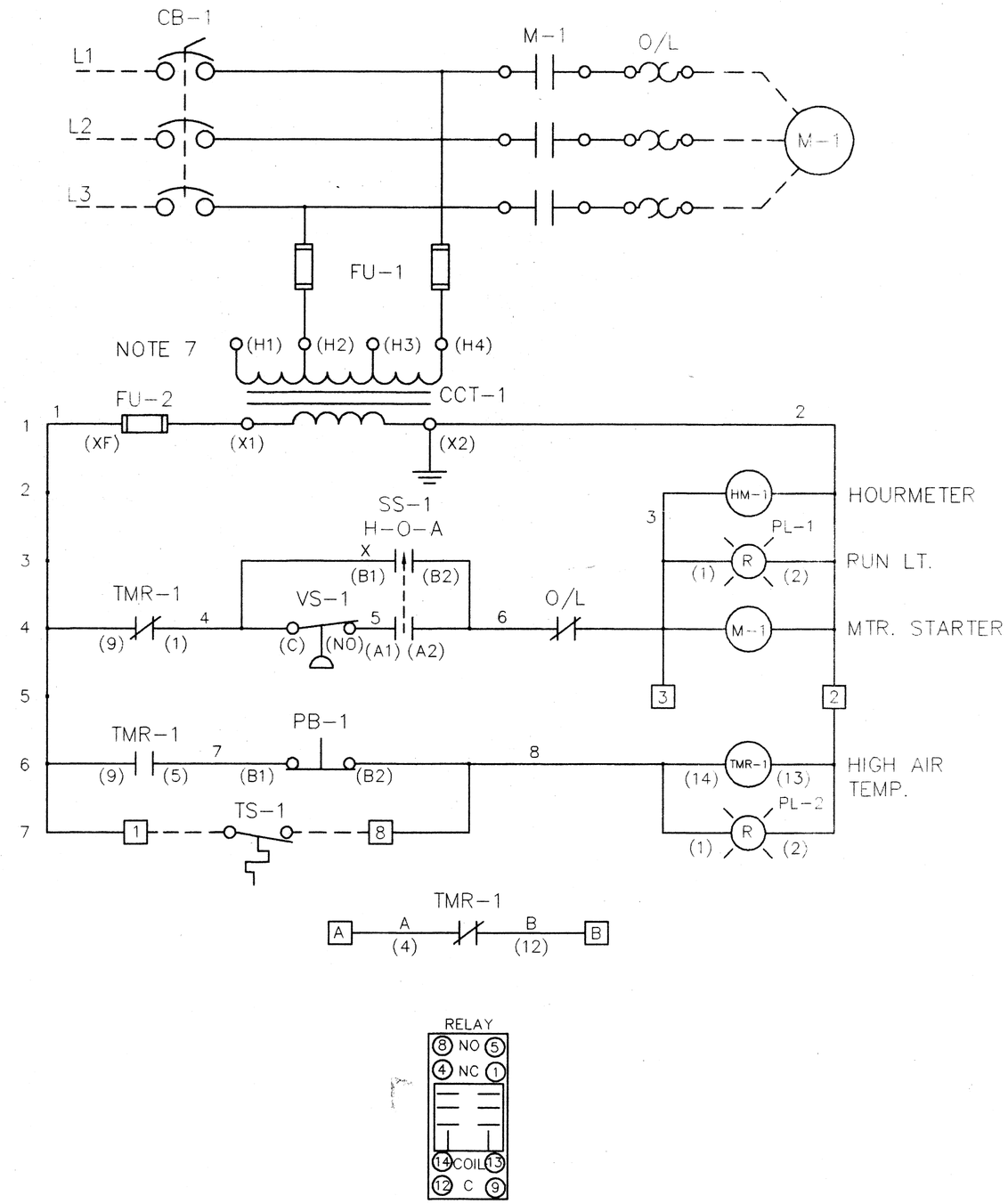

Material Stock Number	Material Required and Specification Number

UNLESS OTHERWISE SPECIFIED DIMENSIONS ARE IN INCHES
TOLERANCES ON:
2 PL DECIMALS ± .02
3 PL DECIMALS ± .005
4 PL DECIMALS ± ---
ANGLES ± 1°
MACH ---

DO NOT SCALE DRAWING

SIGNATURES		DATE
DRAWN	MER	12/18/91
APPROVED		
CHECKED		
RECORDS		
CAD NO	000212.DWG	

Copyright © 1996 by MEDAES, Inc.
This document contains confidential or proprietary information of MEDAES, Inc. Neither the document nor the information therein is to be reproduced, distributed, used or disclosed either in whole or in part, except as specifically authorized by MEDAES, Inc

MEDAES
MEDICAL ARCHITECTURAL & ENGINEERED SYSTEMS

MEDAES, Inc.
2850 Colonnades Court
Norcross, GA 30071
770 448 6684

ELECTRICAL SCHEMATIC, SIMPLEX
I/D, 208, 230, 460 1-10 HP

SIZE	PROJECT NO	DWG NO
C		6914-3100-009

SCALE FULL SHEET 1 OF 1