Elmo Rietschle
A Gardner Denver Product

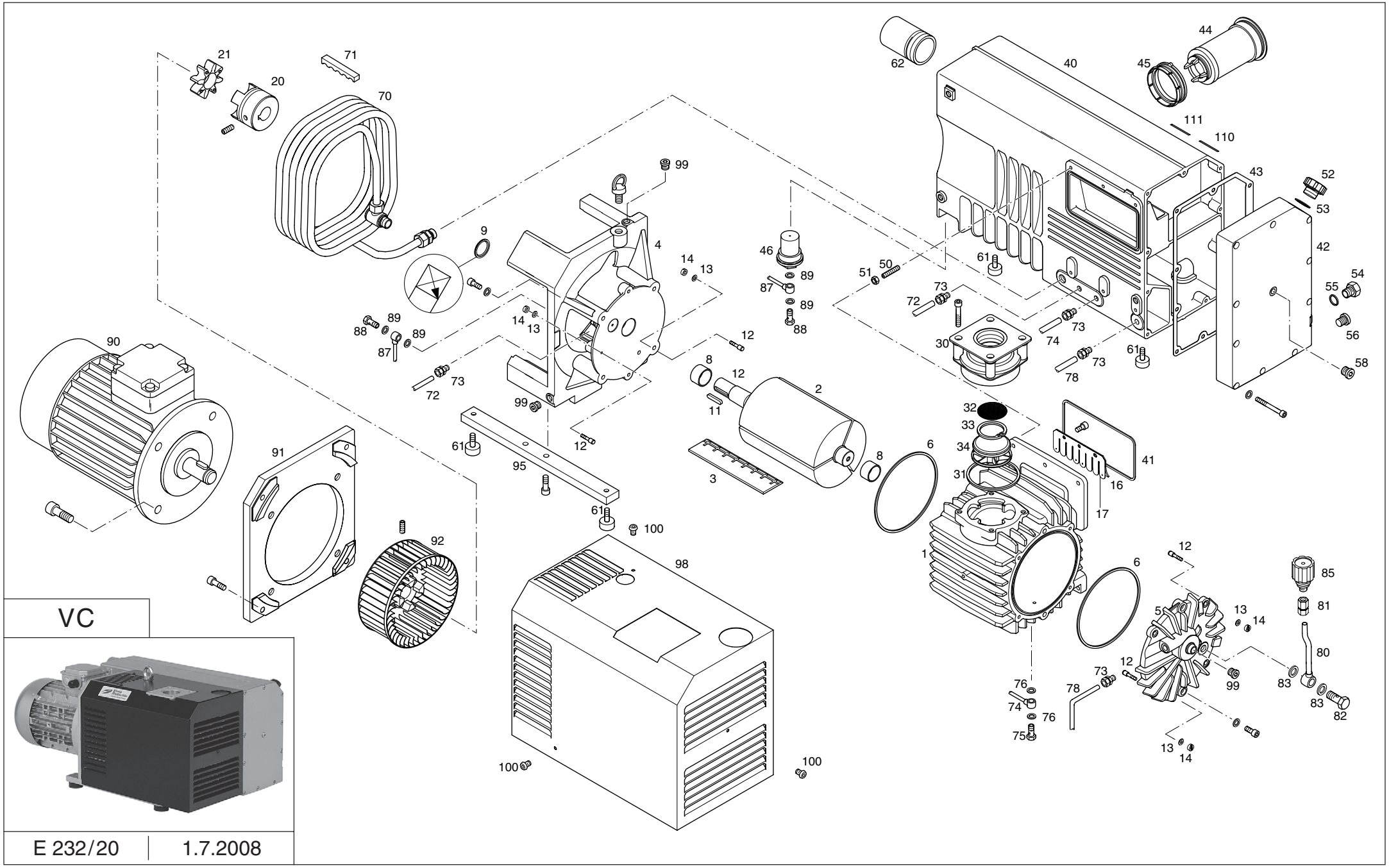

VC

E 232/20 | 1.7.2008