175-0514-000

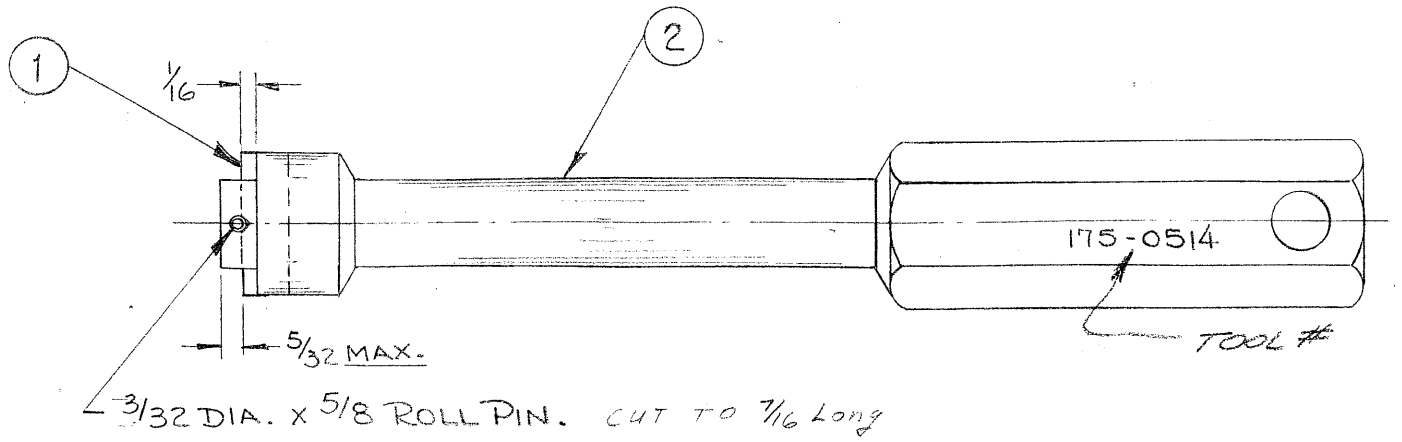

1 BRIGHT NICKEL PLATE

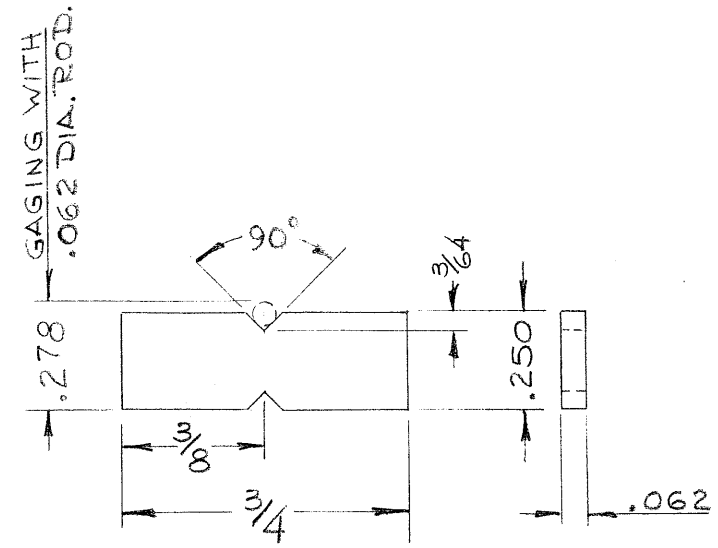

DET. 1 MAT'L: 1/16 x 1/4 OIL-CRAT, HDN. & DRAW TO 50-55 R_C

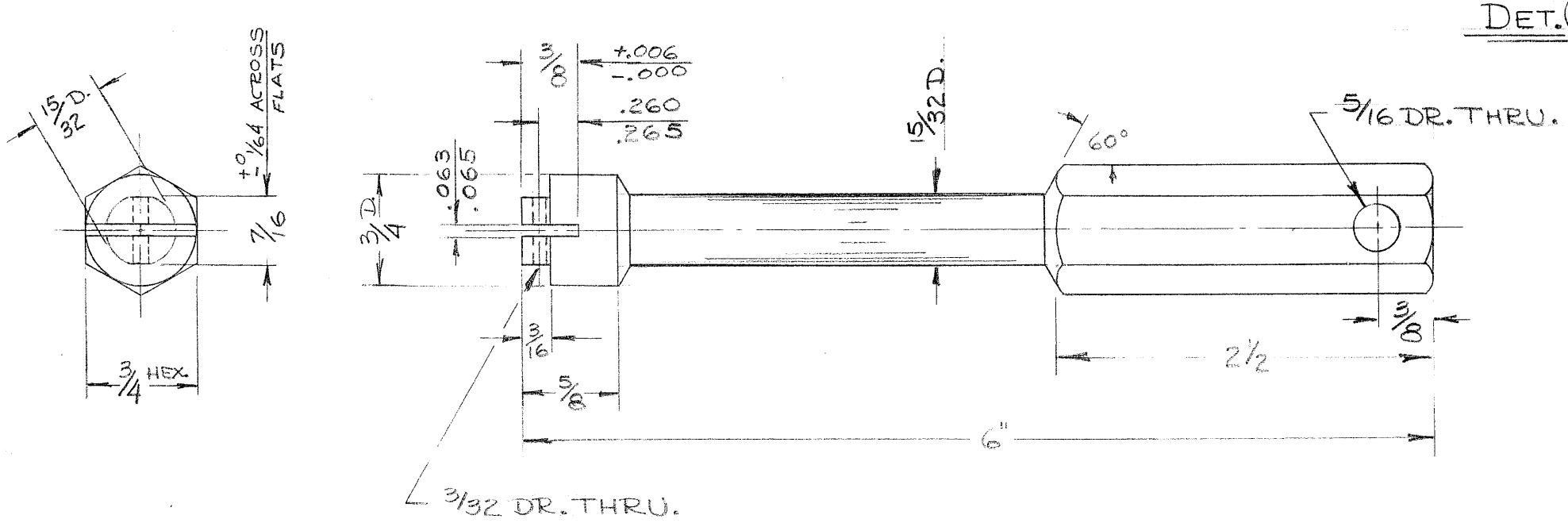

DET. 2 MAT'L: 957-2170-005, 3/4 HEX. LEADED STEEL

1	WAS CAD PLATE	86-0490 10-1-86
NO.	REVISIONS	DATE

THIS DOCUMENT CONTAINS CONFIDENTIAL OR PROPRIETARY INFORMATION OF AIR REDUCTION COMPANY INCORPORATED. NEITHER THE DOCUMENT NOR THE INFORMATION THEREIN IS TO BE REPRODUCED DISTRIBUTED, USED OR DISCLOSED, EITHER IN WHOLE OR IN PART, EXCEPT AS SPECIFICALLY AUTHORIZED BY AIR REDUCTION COMPANY, INCORPORATED.

MAT'L STOCK NO.	MATERIAL REQ'D AND SPEC. NO.	QUAN./EA.
	SPECIFIED	

SCREWDRIVER, SECONDARY CHECK DIAMOND — GR. WT./EA.

AIRCO Ohio Medical Products — MADISON, WISCONSIN — A DIVISION OF AIR REDUCTION COMPANY, INCORPORATED

DR. BY C.C. CH. BY ____ DATE 6/14/69 APP. BY ____

TOLERANCES AND FINISH UNLESS OTHERWISE SPECIFIED

FRACTION	DECIMAL	ANGLE	FINISH	MACH.	POLISH	SCALE
±.010	±.001	±1/2°		M	P	FULL

PR.	DWG.	SIZE B	STOCK NO. 175-0514-000